P1311

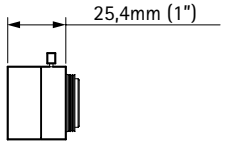

P1343

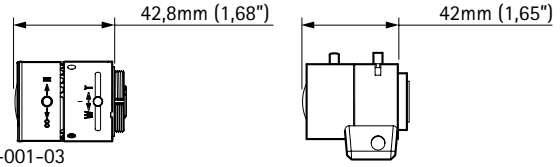

New from PU 0320-001-03

P1344

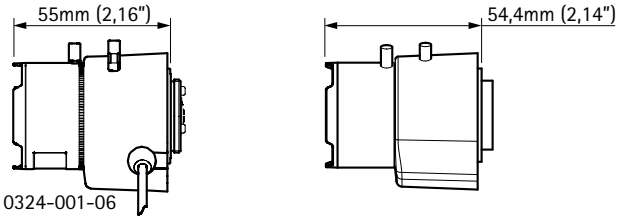

New from PU 0324-001-06

P1346

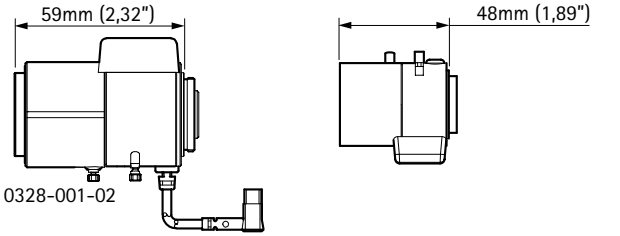

New from PU 0328-001-02

P1347

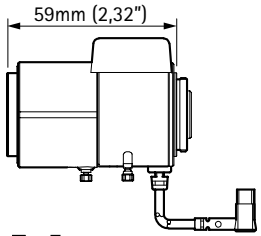

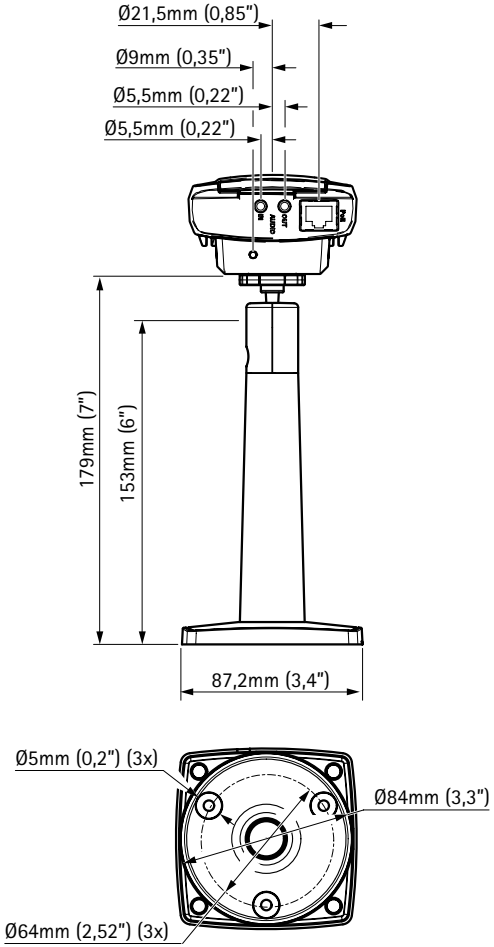

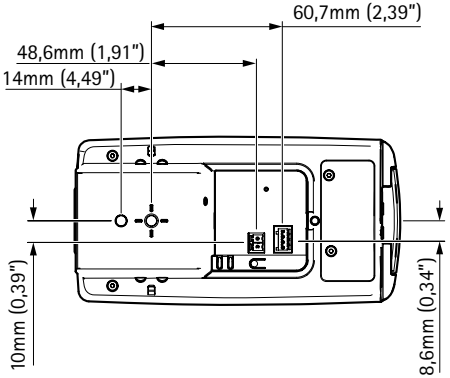

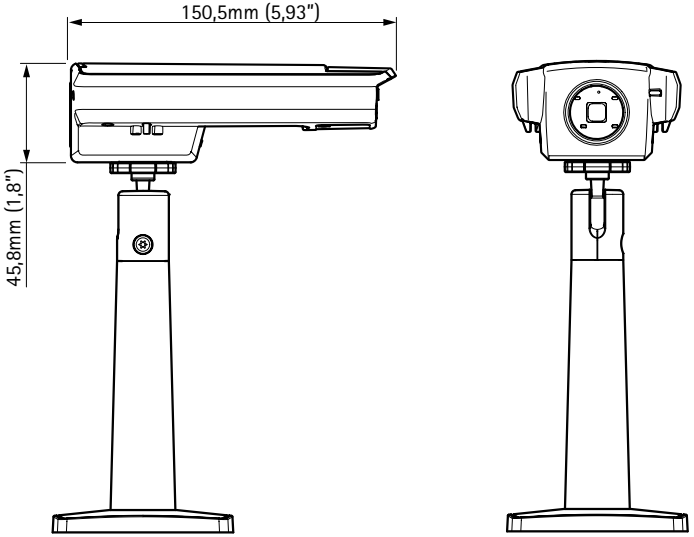

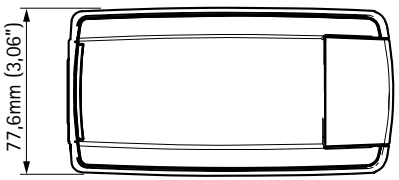

AXIS P13 Network Camera

1 FEB, 2012